SIEMENS

Data sheet 3RA2110-0FE15-1AP0

Load feeder fuseless, Direct-on-line starting 400 V AC, Size S00 0.35...0.50 A 230 V AC Spring-type terminal for installation on standard mounting rail (also fulfills type of coordination 1) Type of coordination 2, Iq = 150 kA 1 NO (contactor)

product brand name	SIRIUS
product designation	Direct (on-line) starter
design of the product	for DIN-rail or screw mounting
product type designation	3RA21
manufacturer's article number	
● of the supplied contactor	3RT2015-2AP01
● of the supplied circuit-breakers	3RV2011-0FA20
● of the supplied link module	3RA2911-2AA00
General technical data	
size of the circuit-breaker	S00
size of load feeder	S00
power loss [W] for rated value of the current	
● at AC in hot operating state per pole	2 W
● without load current share typical	4.2 W
insulation voltage with degree of pollution 3 at AC rated value	690 V
surge voltage resistance rated value	6 kV
degree of protection NEMA rating	other
shock resistance according to IEC 60068-2-27	6g / 11 ms
mechanical service life (operating cycles) of contactor typical	30 000 000
type of coordination	2
reference code according to IEC 81346-2:2019	Q
Substance Prohibitance (Date)	10/01/2009
SVHC substance name	Lead - 7439-92-1
Weight	0.66 kg
Ambient conditions	
ambient temperature	
● during operation	-20 ... +60 °C
● during storage	-50 ... +80 °C
● during transport	-50 ... +80 °C
temperature compensation	-20 ... +60 °C
relative humidity during operation	10 ... 95 %
Main circuit	
number of poles for main current circuit	3
design of the switching contact	electromechanical
adjustable current response value current of the current-dependent overload release	0.35 ... 0.5 A
operating voltage	
● rated value	690 V
● at AC-3 rated value maximum	690 V
● at AC-3e rated value maximum	690 V

Subject to change without notice
© Copyright Siemens

operating frequency rated value	50 ... 60 Hz
operational current	
● at AC-3 at 400 V rated value	0.5 A
● at AC-3e at 400 V rated value	0.5 A
operating power	
● at AC-3	
— at 400 V rated value	120 W
● at AC-3e	
— at 400 V rated value	120 W
Control circuit/ Control	
type of voltage of the control supply voltage	AC
control supply voltage at AC	
● at 50 Hz rated value	230 V
● at 60 Hz rated value	230 V
apparent holding power of magnet coil at AC	4.2 VA
● at 50 Hz	4.2 VA
● at 60 Hz	3.3 VA
inductive power factor with the holding power of the coil	0.25
● at 50 Hz	0.25
● at 60 Hz	0.25
Auxiliary circuit	
product extension auxiliary switch	Yes
Protective and monitoring functions	
trip class	CLASS 10
design of the overload release	thermal (bimetallic)
response value current of instantaneous short-circuit trip unit	6.5 A
UL/CSA ratings	
full-load current (FLA) for 3-phase AC motor	
● at 480 V rated value	0.5 A
● at 600 V rated value	0.5 A
Short-circuit protection	
product function short circuit protection	Yes
design of the short-circuit trip	magnetic
conditional short-circuit current (Iq)	
● at 400 V according to IEC 60947-4-1 rated value	150 000 A
Installation/ mounting/ dimensions	
mounting position	vertical
fastening method	screw and snap-on mounting onto 35 mm DIN rail
height	198 mm
width	45 mm
depth	97 mm
required spacing	
● for grounded parts	
— forwards	20 mm
— backwards	0 mm
— upwards	50 mm
— at the side	20 mm
— downwards	10 mm
● for live parts	
— forwards	20 mm
— backwards	0 mm
— upwards	50 mm
— downwards	10 mm
— at the side	20 mm
Connections/ Terminals	
type of electrical connection	
● for main current circuit	spring-loaded terminals
● for auxiliary and control circuit	spring-loaded terminals
Safety related data	
product function suitable for safety function	Yes

Subject to change without notice
© Copyright Siemens

Electrical Safety	
touch protection on the front according to IEC 60529	finger-safe, for vertical contact from the front

Communication/ Protocol	
protocol is supported	
● PROFINET IO protocol	No
● PROFIsafe protocol	No
protocol is supported AS-Interface protocol	No

Approvals Certificates

General Product Approval	For use in hazardous locations	Test Certificates
UKCA, CE EG-Konf., UL, EAC	ATEX	Special Test Certificate

Test Certificates	Maritime application				
Type Test Certificates/Test Report	ABS	BUREAU VERITAS	DNV	LRS	PRS

Maritime application		other		Railway	Environment
RINA	RMRS	产品合格 QC PASS	Confirmation	Special Test Certificate	Environmental Confirmations

Further information

Information on the packaging
https://support.industry.siemens.com/cs/ww/en/view/109813875
Information for data generation and storage
https://support.industry.siemens.com/cs/ww/en/view/109995012
Information- and Downloadcenter (Catalogs, Brochures,…)
https://www.siemens.com/ic10
Industry Mall (Online ordering system)
https://mall.industry.siemens.com/mall/en/en/Catalog/product?mlfb=3RA2110-0FE15-1AP0
Cax online generator
https://support.automation.siemens.com/WW/CAXorder/default.aspx?lang=en&mlfb=3RA2110-0FE15-1AP0
Service&Support (Manuals, Certificates, Characteristics, FAQs,...)
https://support.industry.siemens.com/cs/ww/en/ps/3RA2110-0FE15-1AP0
Image database (product images, 2D dimension drawings, 3D models, device circuit diagrams, EPLAN macros, ...)
https://www.automation.siemens.com/bilddb/cax_de.aspx?mlfb=3RA2110-0FE15-1AP0&lang=en
Characteristic: Tripping characteristics, I^2t, Let-through current
https://support.industry.siemens.com/cs/ww/en/ps/3RA2110-0FE15-1AP0/char
Further characteristics (e.g. electrical endurance, switching frequency)
https://www.automation.siemens.com/bilddb/index.aspx?view=Search&mlfb=3RA2110-0FE15-1AP0&objecttype=14&gridview=view1

Subject to change without notice
© Copyright Siemens

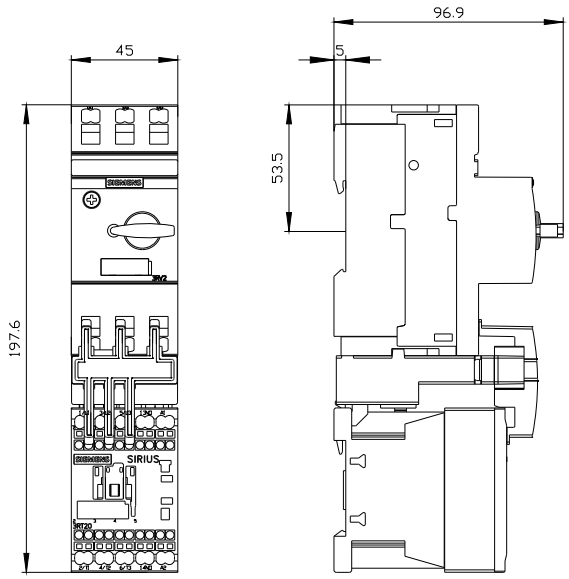

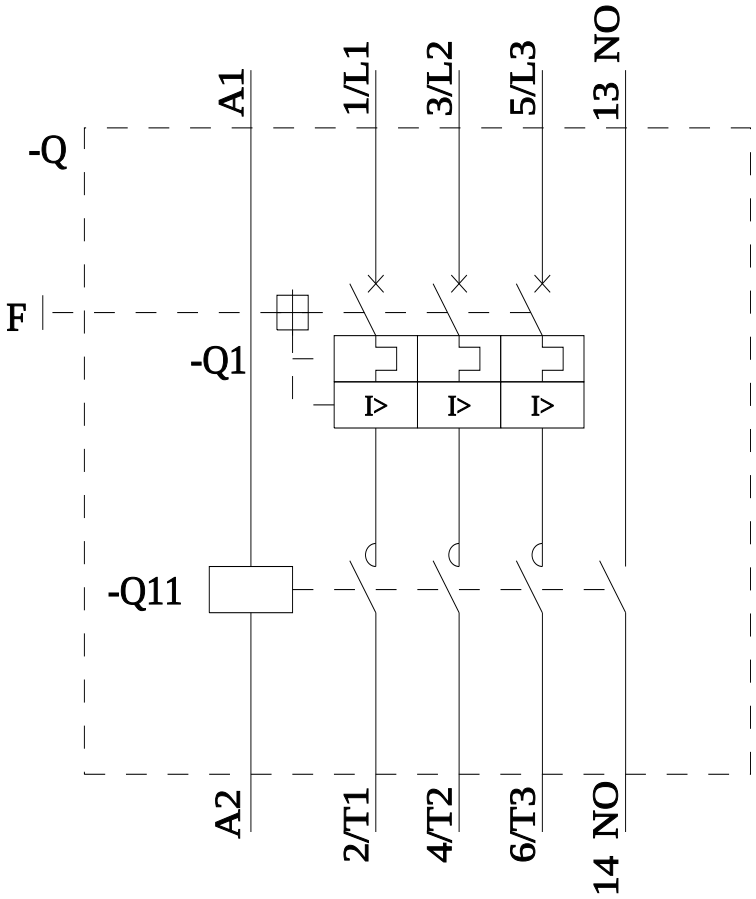

last modified: 4/1/2025

Subject to change without notice
© Copyright Siemens