SIEMENS

Data sheet 3RA8512-1EE00

intelligent load feeder reversing starter standard 0.4-4 A up to 690 V AC type of coordination 2 frame size S00 for ET 200SP system consisting of 3RC7141-1EE00, 3RV2311-1EC20, 2x 3RT2017-2BB42

product brand name	SIRIUS
product designation	Intelligent load feeder
design of the product	reversing starter standard
product type designation	3RA8
manufacturer's article number	
● of the supplied contactor	3RT2017-2BB42
● of the supplied circuit-breakers	3RV2311-1EC20
● of the supplied RH assembly kit	3RA2913-2LA2
● of the supplied link module	3RC7141-1EE00
General technical data	
number of monitored phases	2
suitability for use	
● direct starter	No
● reversing starter	Yes
● star-delta starter	No
product function external reset	Yes
product component RESET button	Yes
design of the overcurrent release	electronic
size of the circuit-breaker	S00
size of load feeder	S00
size of contactor can be combined company-specific	S00
product function	
● remote firmware update	Yes
● disconnector functionality	Yes
● for power supply reverse polarity protection	Yes
power loss [W] for rated value of the current at AC in hot operating state per pole	2.6 W
insulation voltage	
● **rated value**	690 V
● for overvoltage category III according to IEC 60664 with degree of pollution 2 rated value	690 V
degree of pollution	3
overvoltage category	3
surge voltage resistance rated value	6 kV
protection class IP	
● on the front	IP20
● of the terminal	IP20
shock resistance according to IEC 60068-2-27	6g / 11,0 ms (3 shocks); 10g / 6,0 ms (1000 shocks)
vibration resistance	5-8,4 Hz, 3,5 mm; 8,4-150 Hz, 1 g; 10 cycles / 10-60 Hz, 0,35 mm; 60-500 Hz, 5 g; 10 cycles
type of coordination	2

Subject to change without notice
© Copyright Siemens

reference code according to IEC 81346-2	Q
reference code according to IEC 81346-2:2019	Q
continuous current rated value	4 A
Substance Prohibitance (Date)	06/21/2024
SVHC substance name	Lead - 7439-92-1 Lead monoxide (lead oxide) - 1317-36-8 Silicic acid, lead salt - 11120-22-2 2,2',6,6'-tetrabromo-4,4'-isopropylidenediphenol - 79-94-7
Weight	1.596 kg
Ambient conditions	
installation altitude at height above sea level maximum	2 000 m
ambient temperature	
● during operation	-20 ... +60 °C
● during storage	-40 ... +80 °C
● during transport	-40 ... +80 °C
● with upper limit without restrictions	40 °C
environmental category during operation according to IEC 60721	3C3 (without salt spray)
relative humidity during operation	10 ... 95 %
Main circuit	
number of poles for main current circuit	3
design of the switching contact	electromechanical
adjustable current response value current of the current-dependent overload release	0.4 ... 4 A
type of the motor protection	solid-state
type of voltage for main current circuit	AC
utilization category according to IEC 60947-4-1	AC-3e
operating voltage	
● rated value	690 V
● at AC-3 rated value maximum	690 V
● at AC-3e rated value maximum	690 V
operating frequency rated value	50 ... 60 Hz
operational current rated value	4 A
operational current	
● at AC-3	
— at 400 V rated value	4 A
— at 440 V rated value	4 A
— at 500 V rated value	4 A
— at 690 V rated value	4 A
● at AC-3e	
— at 400 V rated value	4 A
— at 440 V rated value	4 A
— at 500 V rated value	4 A
— at 690 V rated value	4 A
operating power	
● at AC-3	
— at 400 V rated value	1 500 W
— at 500 V rated value	2 200 W
— at 690 V rated value	3 000 W
● at AC-3e	
— at 400 V rated value	1 500 W
— at 500 V rated value	2 200 W
— at 690 V rated value	3 000 W
Control circuit/ Control	
type of voltage of the control supply voltage	DC
closing delay at DC	40 ... 110 ms
opening delay at DC	30 ... 50 ms
Auxiliary circuit	
product component auxiliary switch	No
product extension auxiliary switch	Yes
type of voltage for auxiliary and control circuit	DC
auxiliary voltage at DC rated value	24 V

Subject to change without notice
© Copyright Siemens

auxiliary voltage at DC rated value	20.4 ... 28.8 V
inrush current peak for auxiliary voltage at DC at 24 V	2.5 A
duration of inrush current peak for auxiliary voltage at DC at 24 V	1 ms
power loss [W] at the auxiliary voltage in holding operation at DC at 24 V	0.9 W
Protective and monitoring functions	
type of protection function of the overcurrent release	electronic
product function	
● ground fault detection	No
● phase failure detection	Yes
● phase sequence recognition	Yes
● overcurrent detection 1 phase	Yes
● undercurrent detection 3 phases	Yes
● undercurrent monitoring	Yes
● overcurrent and undercurrent monitoring	Yes
● undercurrent detection 1 phase	Yes
● overcurrent detection 3 phase	Yes
● overload protection	Yes
● overload warning	Yes
● temperature-compensated overload protection	No
● motor protection	Yes
● active current monitoring	No
● main switches with supply disconnect function and EM-STOP switches	No
● operating hours counter	Yes
trip class	CLASS 10E / CLASS 20E
design of the overload release	electronic
response value current of instantaneous short-circuit trip unit	52 A
UL/CSA ratings	
full-load current (FLA) for 3-phase AC motor	
● at 480 V rated value	4 A
● at 600 V rated value	4 A
yielded mechanical performance [hp]	
● for single-phase AC motor	
— at 110/120 V rated value	0.16 hp
— at 230 V rated value	0.5 hp
● for 3-phase AC motor	
— at 200/208 V rated value	1 hp
— at 220/230 V rated value	1 hp
— at 460/480 V rated value	3 hp
— at 575/600 V rated value	3 hp
conditional short-circuit current (Iq) with type of coordination 1	
● at 480 AC Y/277 V rated value	65 000 A
operating voltage	
● according to UL 60947 rated value	600 V
● at AC at 60 Hz according to CSA and UL rated value	600 V
Short-circuit protection	
product function short circuit protection	Yes
design of the short-circuit trip	magnetic
conditional short-circuit current (Iq)	
● at 690 V according to IEC 60947-4-1 rated value	1 000 A
● at 400 V according to IEC 60947-4-1 rated value	150 000 A
● at 440 V according to IEC 60947-4-1 rated value	100 000 A
● at 500 V according to IEC 60947-4-1 rated value	10 000 A
conditional short-circuit current (Iq) with type of coordination 2	
● at 230 V rated value	150 000 A
● at 400 V rated value	150 000 A
certificate of suitability ATEX	No
Installation/ mounting/ dimensions	

Subject to change without notice
© Copyright Siemens

mounting position	vertical, on horizontal standard mounting rail
fastening method	screw and snap-on mounting onto 35 mm DIN rail
● mounting rail	Yes
height	204 mm
width	90 mm
depth	131 mm
required spacing	
● for grounded parts at 400 V	
— downwards	10 mm
— upwards	20 mm
— backwards	0 mm
— at the side	9 mm
— forwards	0 mm
● for live parts at 400 V	
— downwards	10 mm
— upwards	20 mm
— backwards	0 mm
— at the side	9 mm
— forwards	0 mm
● for grounded parts at 500 V	
— downwards	10 mm
— upwards	20 mm
— backwards	0 mm
— at the side	9 mm
— forwards	0 mm
● for live parts at 500 V	
— downwards	10 mm
— upwards	20 mm
— backwards	0 mm
— at the side	9 mm
— forwards	0 mm
● for grounded parts at 690 V	
— downwards	10 mm
— upwards	50 mm
— at the side	20 mm
— forwards	0 mm
● for live parts at 690 V	
— downwards	10 mm
— upwards	50 mm
— at the side	20 mm
— forwards	0 mm
Connections/ Terminals	
product component removable terminal for auxiliary and control circuit	No
type of electrical connection	
● for main current circuit	spring-loaded terminals
● for auxiliary and control circuit	spring-loaded terminals (push-in)
type of electrical connection for supply voltage line-side	spring-loaded terminals (push-in)
type of connectable conductor cross-sections	
● for main contacts	
— solid	2x (0.5 ... 4 mm²)
— stranded	2x (0.5 ... 4 mm²)
— finely stranded with core end processing	2x (0.5 ... 2.5 mm²)
● for AWG cables for main contacts	2x 20 ... 12
connectable conductor cross-section for main contacts	
● solid	0.5 ... 4 mm²
● stranded	0.5 ... 4 mm²
● finely stranded with core end processing	0.5 ... 2.5 mm²
type of connectable conductor cross-sections at the inputs for supply voltage	
● solid	0.2 ... 1.5 mm²

Subject to change without notice
© Copyright Siemens

● finely stranded without core end processing	0.2 ... 1.5 mm²
● finely stranded with core end processing	0.2 ... 1.0 mm²
type of connectable conductor cross-sections at the inputs for supply voltage for AWG cables solid	24 ... 16
Electrical Safety	
touch protection against electrical shock	IP20
touch protection on the front according to IEC 60529	finger-safe
Communication/ Protocol	
protocol is supported other protocols	Yes
product function bus communication	Yes
product function control circuit interface with IO link	No
product function control circuit interface with AS-interface	No
data volume	
● of the address range of the inputs with cyclical transfer total	16 byte
● of the address range of the outputs with cyclical transfer total	2 byte
address space memory of address range	
● of the inputs	16 byte
● of the outputs	2 byte
type of electrical connection of the communication interface	RJ45
Electromagnetic compatibility	
conducted interference	
● due to burst according to IEC 61000-4-4	2 kV
● due to conductor-earth surge according to IEC 61000-4-5	2 kV
● due to conductor-conductor surge according to IEC 61000-4-5	1 kV
● due to high-frequency radiation according to IEC 61000-4-6	10 V
field-based interference according to IEC 61000-4-3	10 V/m
electrostatic discharge according to IEC 61000-4-2	8 kV air discharge
conducted HF interference emissions according to CISPR11	Class A for industrial environment
field-bound HF interference emission according to CISPR11	Class A for industrial environment
Supply voltage	
type of voltage of the supply voltage	DC
supply voltage 1 at DC rated value	
● minimum permissible	19.2 V
● maximum permissible	28.8 V
auxiliary voltage at DC rated value	20.4 ... 28.8 V
supply voltage at DC rated value	24 V
inrush current peak with supply voltage at DC at 24 V	1.25 A
duration of inrush current peak with supply voltage at DC at 24 V	5 ms
power loss [W] at supply voltage at DC at 24 V	0.5 W

Approvals Certificates

General Product Approval	EMV	Test Certificates	other
CE EG-Konf. UKCA UL	RCM	Type Test Certificates/Test Report	Confirmation

other	Environment
产品合格 QC PASS	Environmental Confirmations

Further information

Information on the packaging

Subject to change without notice
© Copyright Siemens

https://support.industry.siemens.com/cs/ww/en/view/109813875

Information for data generation and storage
https://support.industry.siemens.com/cs/ww/en/view/109995012

Information- and Downloadcenter (Catalogs, Brochures,…)
https://www.siemens.com/ic10

Industry Mall (Online ordering system)
https://mall.industry.siemens.com/mall/en/en/Catalog/product?mlfb=3RA8512-1EE00

Cax online generator
https://support.automation.siemens.com/WW/CAXorder/default.aspx?lang=en&mlfb=3RA8512-1EE00

Service&Support (Manuals, Certificates, Characteristics, FAQs,...)
https://support.industry.siemens.com/cs/ww/en/ps/3RA8512-1EE00

Image database (product images, 2D dimension drawings, 3D models, device circuit diagrams, EPLAN macros, ...)
https://www.automation.siemens.com/bilddb/cax_de.aspx?mlfb=3RA8512-1EE00&lang=en

Characteristic: Tripping characteristics, I²t, Let-through current
https://support.industry.siemens.com/cs/ww/en/ps/3RA8512-1EE00/char

Further characteristics (e.g. electrical endurance, switching frequency)
https://www.automation.siemens.com/bilddb/index.aspx?view=Search&mlfb=3RA8512-1EE00&objecttype=14&gridview=view1

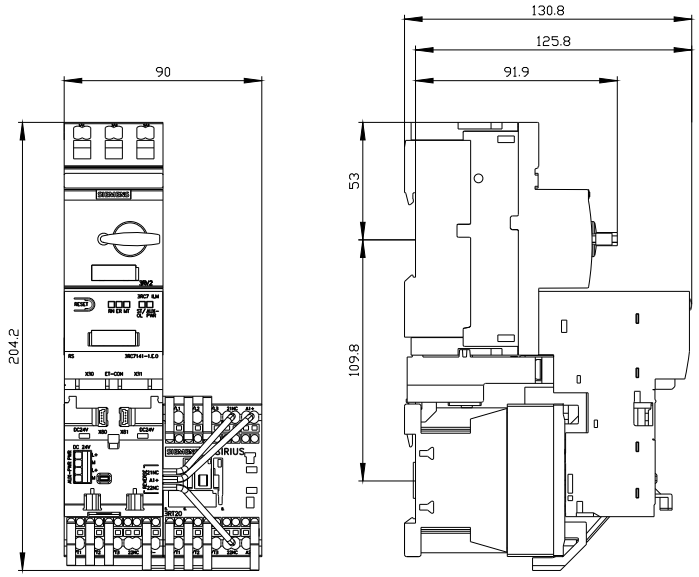

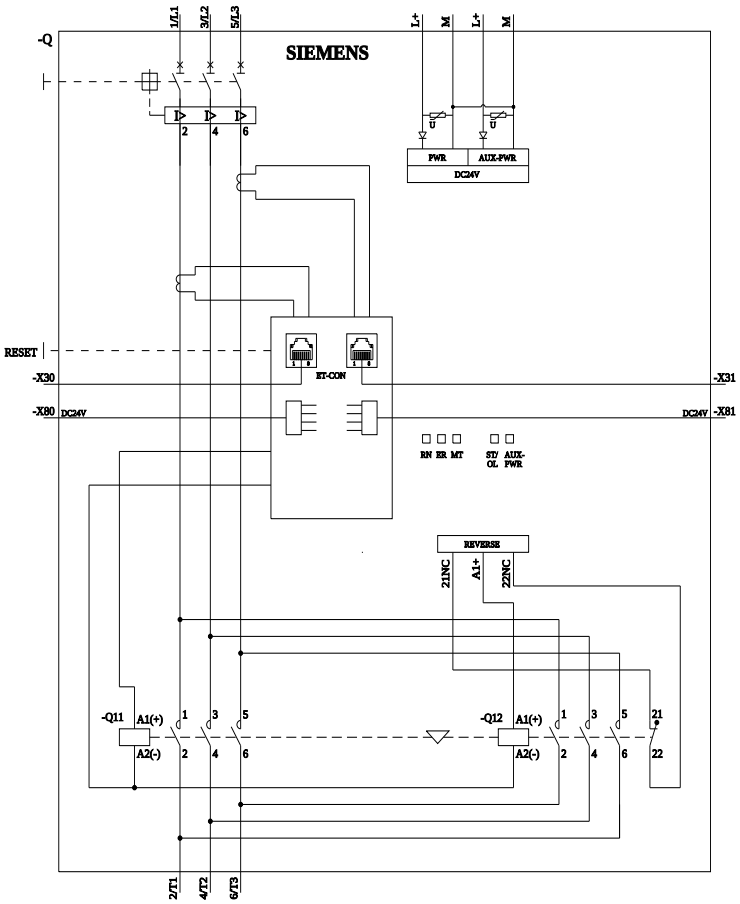

Subject to change without notice
© Copyright Siemens

last modified:	8/14/2025

Subject to change without notice
© Copyright Siemens