SIEMENS

Data sheet 3RV2711-0FD10

Siemens EcoTech

circuit breaker frame size S00 for system protection with approval circuit breaker UL 489, CSA C22.2 no. 5-02 thermal overload release 0.5 A short-circuit release 6.5 A screw terminal standard switching capacity

product brand name	SIRIUS
product designation	Circuit breaker
design of the product	For system protection according to UL 489/CSA C22.2 No. 5
product type designation	3RV2
General technical data	
size of the circuit-breaker	S00
product extension auxiliary switch	Yes
power loss [W] for rated value of the current	
● at AC in hot operating state	5.5 W
● at AC in hot operating state per pole	1.8 W
insulation voltage with degree of pollution 3 at AC rated value	690 V
surge voltage resistance rated value	6 kV
shock resistance according to IEC 60068-2-27	25 g / 11 ms (rectangular impulse and sine pulse)
mechanical service life (operating cycles)	
● of the main contacts typical	100 000
● of auxiliary contacts typical	100 000
electrical endurance (operating cycles) typical	100 000
reference code according to IEC 81346-2	Q
Substance Prohibitance (Date)	10/01/2009
SVHC substance name	Lead - 7439-92-1
Weight	0.447 kg
Ambient conditions	
installation altitude at height above sea level maximum	2 000 m
ambient temperature	
● during operation	-20 ... +60 °C
● during storage	-50 ... +80 °C
● during transport	-50 ... +80 °C
relative humidity during operation	10 ... 95 %
Environmental footprint	
Environmental Product Declaration(EPD)	Yes
global warming potential [CO2 eq] total	74.698 kg
global warming potential [CO2 eq] during manufacturing	1.98 kg
global warming potential [CO2 eq] during sales	0.134 kg
global warming potential [CO2 eq] during operation	72.7 kg
global warming potential [CO2 eq] after end of life	-0.116 kg
Siemens Eco Profile (SEP)	Siemens EcoTech
Main circuit	

Subject to change without notice
© Copyright Siemens

number of poles for main current circuit	3
type of voltage for main current circuit	AC
operating voltage	
● rated value	20 ... 690 V
● at AC-3 rated value maximum	690 V
● at AC-3e rated value maximum	690 V
operating frequency rated value	50 ... 60 Hz
operational current rated value	0.5 A
operational current	
● at AC-3 at 400 V rated value	0.5 A
● at AC-3e at 400 V rated value	0.5 A
operating power	
● at AC-3	
— at 230 V rated value	0.1 kW
— at 400 V rated value	0.1 kW
— at 500 V rated value	0.1 kW
— at 690 V rated value	0.2 kW
● at AC-3e	
— at 230 V rated value	0.1 kW
— at 400 V rated value	0.1 kW
— at 500 V rated value	0.1 kW
— at 690 V rated value	0.2 kW
operating frequency	
● at AC-3 maximum	15 1/h
● at AC-3e maximum	15 1/h
Auxiliary circuit	
type of voltage for auxiliary and control circuit	AC/DC
number of NC contacts for auxiliary contacts	0
number of NO contacts for auxiliary contacts	0
number of CO contacts for auxiliary contacts	0
Protective and monitoring functions	
product function	
● ground fault detection	No
● phase failure detection	No
design of the overload release	thermal
maximum short-circuit current breaking capacity (Icu)	
● at AC at 240 V rated value	100 kA
● at AC at 400 V rated value	100 kA
● at AC at 500 V rated value	100 kA
● at AC at 690 V rated value	100 kA
● at 480 AC Y/277 V according to UL 489 rated value	65 kA
operating short-circuit current breaking capacity (Ics) at AC	
● at 240 V rated value	100 kA
● at 400 V rated value	100 kA
● at 500 V rated value	100 kA
● at 690 V rated value	100 kA
response value current of instantaneous short-circuit trip unit	6.5 A
UL/CSA ratings	
Category Control Number (CCN)	E156943 (NKJH, NKJH7)
Short-circuit protection	
product function short circuit protection	Yes
design of the short-circuit trip	magnetic
design of the fuse link for IT network for short-circuit protection of the main circuit	
● at 690 V	gG 4 A
Installation/ mounting/ dimensions	
mounting position	any
fastening method	screw and snap-on mounting onto 35 mm DIN rail according to DIN EN 60715
height	144 mm
width	45 mm
depth	97 mm

Subject to change without notice
© Copyright Siemens

required spacing	
● for grounded parts at 400 V	
— downwards	30 mm
— upwards	30 mm
— at the side	30 mm
● for live parts at 400 V	
— downwards	30 mm
— upwards	30 mm
— at the side	30 mm
● for grounded parts at 500 V	
— downwards	30 mm
— upwards	30 mm
— at the side	30 mm
● for live parts at 500 V	
— downwards	30 mm
— upwards	30 mm
— at the side	30 mm
● for grounded parts at 690 V	
— downwards	70 mm
— upwards	70 mm
— backwards	0 mm
— at the side	30 mm
— forwards	0 mm
● for live parts at 690 V	
— downwards	70 mm
— upwards	70 mm
— backwards	0 mm
— at the side	30 mm
— forwards	0 mm
Connections/ Terminals	
type of electrical connection	
● for main current circuit	screw-type terminals
arrangement of electrical connectors for main current circuit	Top and bottom
type of connectable conductor cross-sections	
● for main contacts	
— solid or stranded	1 ... 10 mm², max. 2x 10 mm²
— finely stranded with core end processing	1 ... 16 mm², max. 6 + 16 mm²
● for AWG cables for main contacts	2x (14 ... 10)
tightening torque	
● for main contacts with screw-type terminals	2.5 ... 3 N·m
design of screwdriver shaft	Diameter 5 to 6 mm
size of the screwdriver tip	Pozidriv size 2
design of the thread of the connection screw	
● for main contacts	M4
Safety related data	
product function suitable for safety function	Yes
suitability for use	
● safety-related switching on	No
● safety-related switching OFF	Yes
service life maximum	10 a
test wear-related service life necessary	Yes
proportion of dangerous failures	
● with low demand rate according to SN 31920	40 %
● with high demand rate according to SN 31920	50 %
B10 value with high demand rate according to SN 31920	5 000
failure rate [FIT] with low demand rate according to SN 31920	50 FIT
ISO 13849	
device type according to ISO 13849-1	3
overdimensioning according to ISO 13849-2 necessary	Yes

Subject to change without notice
© Copyright Siemens

IEC 61508	
safety device type according to IEC 61508-2	Type A
T1 value	
● for proof test interval or service life according to IEC 61508	10 a
Electrical Safety	
protection class IP on the front according to IEC 60529	IP20
touch protection on the front according to IEC 60529	finger-safe, for vertical contact from the front
Display	
display version for switching status	Handle

Approvals Certificates

General Product Approval

KC

General Product Approval	Test Certificates		Maritime application		other
	Type Test Certificates/Test Report	Special Test Certificate			Miscellaneous

other			Railway	Environment	
	Confirmation		Special Test Certificate		

Environment

Environmental Confirmations

Further information

Information on the packaging
https://support.industry.siemens.com/cs/ww/en/view/109813875
Information for data generation and storage
https://support.industry.siemens.com/cs/ww/en/view/109995012
Information- and Downloadcenter (Catalogs, Brochures,…)
https://www.siemens.com/ic10
Industry Mall (Online ordering system)
https://mall.industry.siemens.com/mall/en/en/Catalog/product?mlfb=3RV2711-0FD10
Cax online generator
https://support.automation.siemens.com/WW/CAXorder/default.aspx?lang=en&mlfb=3RV2711-0FD10
Service&Support (Manuals, Certificates, Characteristics, FAQs,...)
https://support.industry.siemens.com/cs/ww/en/ps/3RV2711-0FD10
Image database (product images, 2D dimension drawings, 3D models, device circuit diagrams, EPLAN macros, ...)
https://www.automation.siemens.com/bilddb/cax_de.aspx?mlfb=3RV2711-0FD10&lang=en
Characteristic: Tripping characteristics, I²t, Let-through current
https://support.industry.siemens.com/cs/ww/en/ps/3RV2711-0FD10/char
Further characteristics (e.g. electrical endurance, switching frequency)
https://www.automation.siemens.com/bilddb/index.aspx?view=Search&mlfb=3RV2711-0FD10&objecttype=14&gridview=view1

Subject to change without notice
© Copyright Siemens

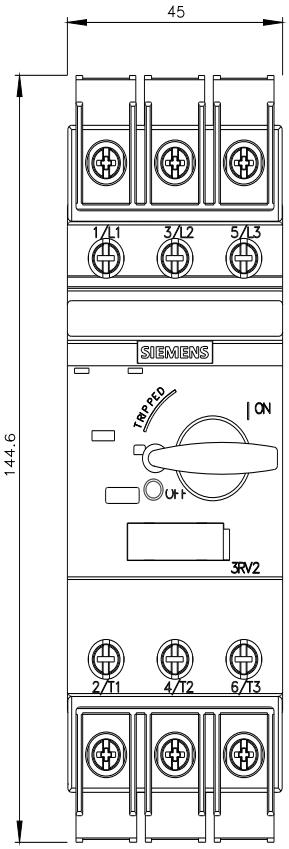

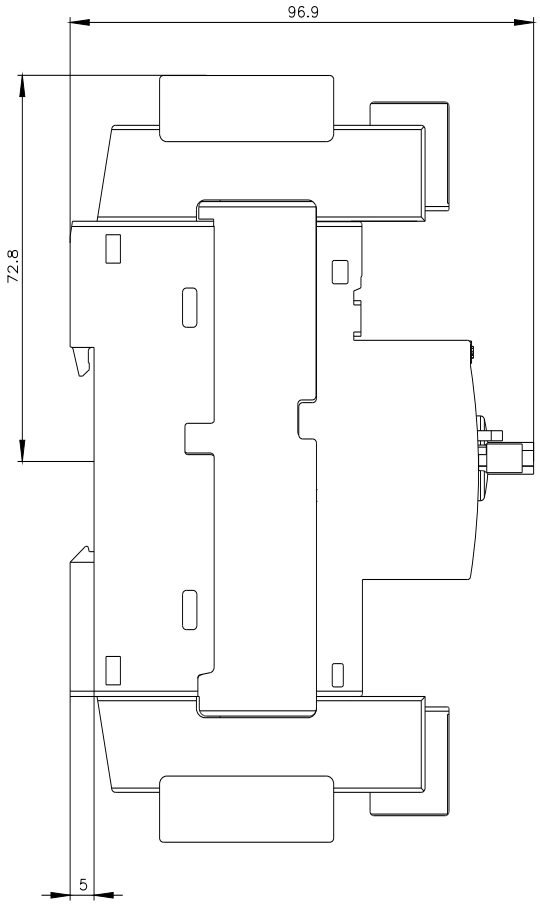

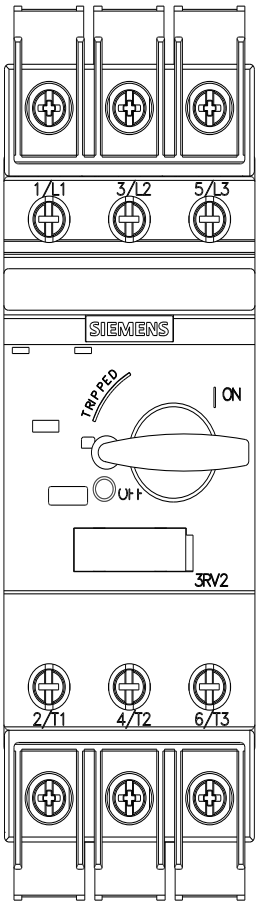

Subject to change without notice
© Copyright Siemens

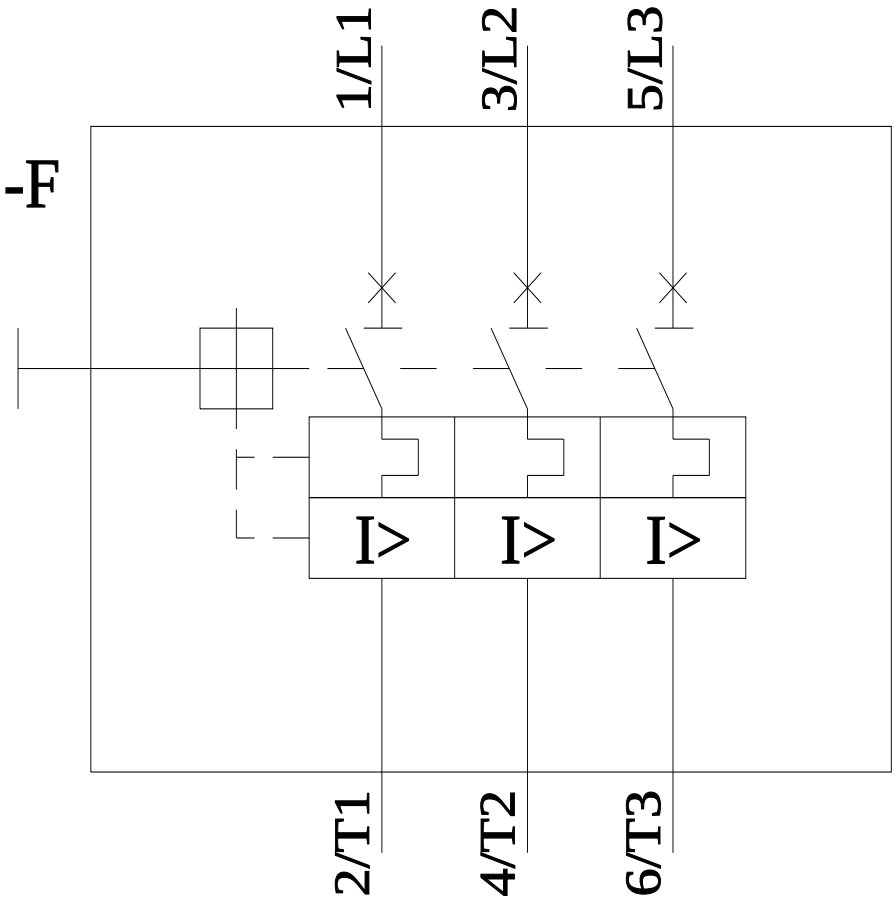

last modified: 11/13/2025

Subject to change without notice
© Copyright Siemens