SIEMENS

Data sheet 3TY7681-1G

Auxiliary switch block, for coil switchover in DC economy circuit with screw terminal for 3TF57...3TF69

product category	Auxiliary switch
product designation	auxiliary switch
design of the product	NC contact with longer make-time
product type designation	3TY7
suitability for use	Contactor relay and power contactor
General technical data	
size of contactor	12 ... 14
insulation voltage with degree of pollution 3 at AC rated value	690 V
surge voltage resistance rated value	6 kV
protection class IP on the front	IP20
mechanical service life (operating cycles) typical	10 000 000
Substance Prohibitance (Date)	07/01/2006
Weight	0.05 kg
number of NC contacts for auxiliary contacts	
● instantaneous contact	0
● lagging switching	1
number of NO contacts for auxiliary contacts	
● instantaneous contact	0
● leading contact	0
number of CO contacts of auxiliary contacts instantaneous contact	0
operational current at AC-15 at 690 V rated value	2.3 A
operational current of auxiliary contacts at AC-12	
● at 24 V	10 A
● at 230 V	10 A
operational current of auxiliary contacts at AC-14	
● at 125 V	10 A
operational current of auxiliary contacts at AC-12 maximum	10 A
operational current of auxiliary contacts at AC-15	
● at 24 V	10 A
● at 230 V	5.6 A
● at 400 V	3.6 A
operational current of auxiliary contacts at DC-12	
● at 24 V	10 A
● at 110 V	3.2 A
● at 220 V	0.9 A
operational current of auxiliary contacts at DC-13	
● at 24 V	10 A
● at 48 V	5 A

Subject to change without notice
© Copyright Siemens

● at 60 V	5 A
● at 110 V	1.14 A
● at 125 V	0.98 A
● at 220 V	0.48 A
Ambient conditions	
ambient temperature	
● during operation	-25 ... +55 °C
● during storage	-55 ... +80 °C
Safety related data	
product function	
● positively driven operation according to IEC 60947-5-1	Yes
Installation/ mounting/ dimensions	
fastening method	snap-on mounting
height	70 mm
width	12 mm
depth	51.5 mm
Connections/ Terminals	
type of electrical connection for auxiliary and control circuit	screw-type terminals
connectable conductor cross-section for auxiliary contacts	
● solid or stranded	0.5 ... 2.5 mm²
● finely stranded with core end processing	0.5 ... 2.5 mm²
type of connectable conductor cross-sections	
● for auxiliary contacts	
— solid or stranded	2x (0,5 ... 1,0 mm²), 2x (1,0 ... 2,5 mm²)
— finely stranded with core end processing	2x (0.5 ... 1.0 mm²), 2x (0.75 ... 2.5 mm²)
● for AWG cables for auxiliary contacts	2x (18 ... 12)
AWG number as coded connectable conductor cross section for auxiliary contacts	18 ... 12

Approvals Certificates

General Product Approval	other		Environment
CCC, CE EG-Konf., EAC, 产品合格 QC PASS		Confirmation	Environmental Confirmations

Further information

Information on the packaging
https://support.industry.siemens.com/cs/ww/en/view/109813875
Information for data generation and storage
https://support.industry.siemens.com/cs/ww/en/view/109995012
Information- and Downloadcenter (Catalogs, Brochures,…)
https://www.siemens.com/ic10
Industry Mall (Online ordering system)
https://mall.industry.siemens.com/mall/en/en/Catalog/product?mlfb=3TY7681-1G
Cax online generator
https://support.automation.siemens.com/WW/CAXorder/default.aspx?lang=en&mlfb=3TY7681-1G
Service&Support (Manuals, Certificates, Characteristics, FAQs,...)
https://support.industry.siemens.com/cs/ww/en/ps/3TY7681-1G
Image database (product images, 2D dimension drawings, 3D models, device circuit diagrams, EPLAN macros, ...)
https://www.automation.siemens.com/bilddb/cax_de.aspx?mlfb=3TY7681-1G&lang=en

Subject to change without notice
© Copyright Siemens

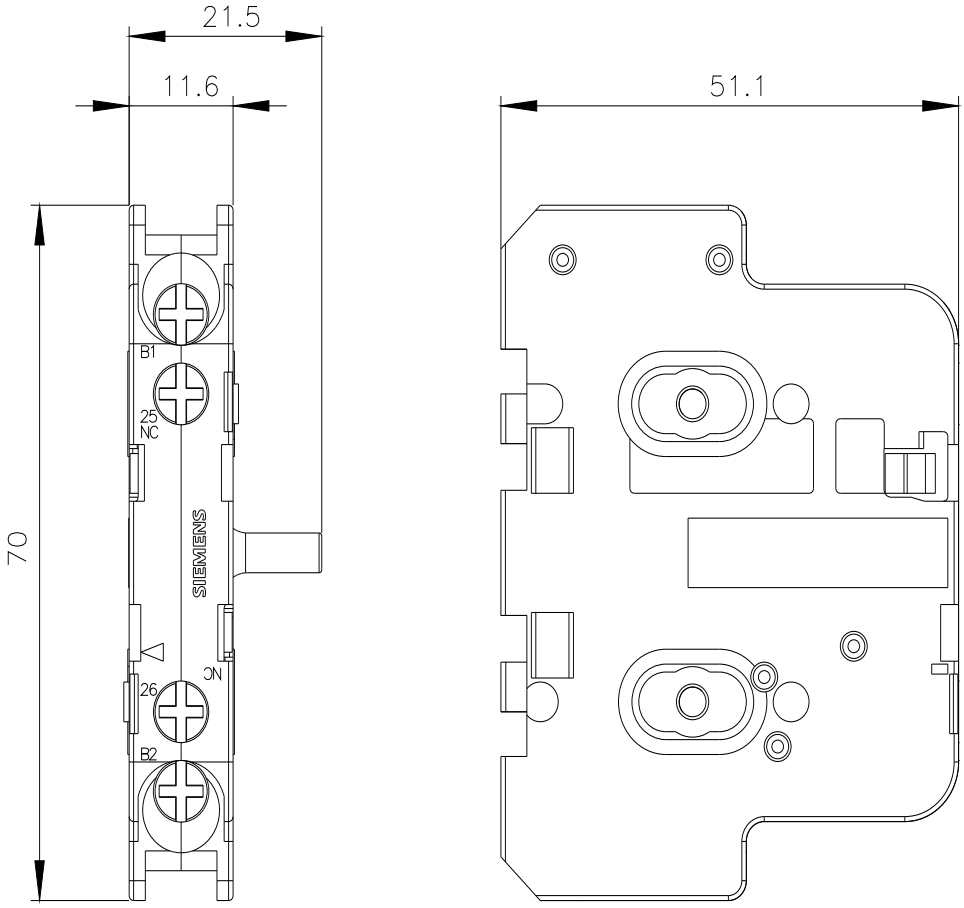

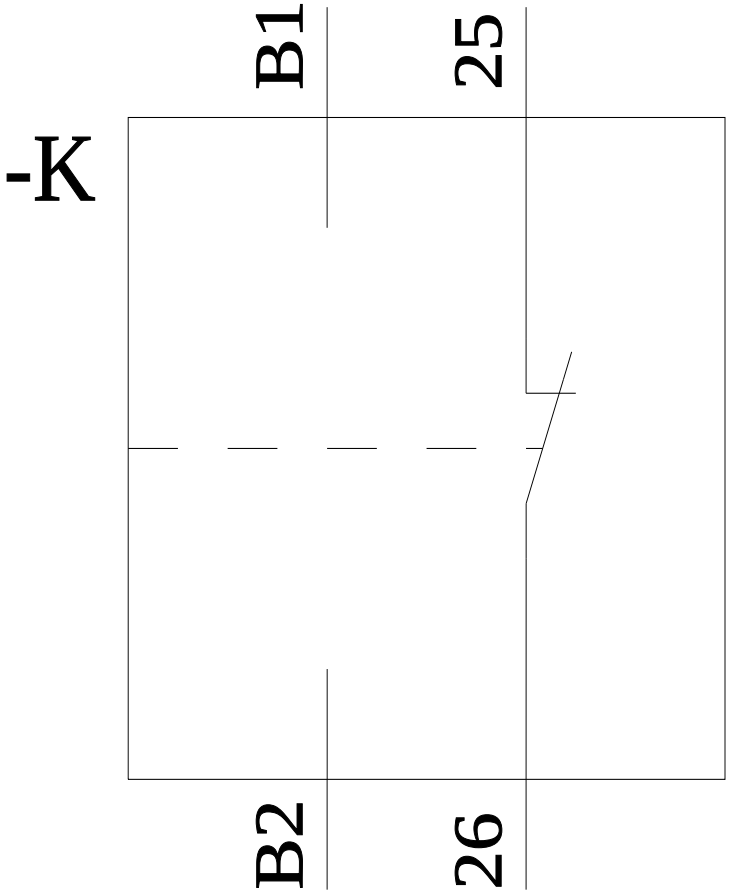

last modified: 4/1/2025

Subject to change without notice
© Copyright Siemens

Subject to change without notice
© Copyright Siemens